RClamp0582B
Low Capacitance TVS for ESD and Surge Protection

PROTECTION PRODUCTS - RailClamp®

Description

RailClamp® TVS diodes are specifically designed to protect sensitive components which are connected to high-speed data and transmission lines from overvoltage caused by ESD (electrostatic discharge), CDE (cable discharge events), and EFT (electrical fast transients).

The RClamp®0582B features high peak pulse current capability (Ipp=15A, tp=8/20us) for use in applications that require high surge immunity testing. It has a maximum capacitance of only 1.2pF (pin 1 or 2 to pin3). This means it can be used on high-speed interfaces such as USB 2.0 and LVDS data lines. They may be used to meet the ESD immunity requirements of IEC 61000-4-2 (±30kV air, ±25kV contact discharge). Each device can be configured to protect 1 bidirectional line or two unidirectional lines.

These devices are in a small SC-75 (SOT-523) package and feature a lead-free, matte tin finish. They are compatible with both lead free and SnPb assembly techniques. They are designed for use in applications where board space is at a premium. The combination of small size, low capacitance, and high level of surge protection makes them a flexible solution for applications such as set top boxes, displays, and portable electronics.

Features

- Transient protection for high-speed data lines to **IEC 61000-4-2 (ESD) ±30kV (air), ±25kV (contact)** **IEC 61000-4-4 (EFT) 40A (5/50ns)**
- Protects up to two I/O lines
- Low capacitance **(<1.2pF)**
- High surge capability: **15A (tp=8/20us)**
- Low leakage current and clamping voltage
- Low operating voltage: 5.0V
- Solid-state silicon-avalanche technology

Mechanical Characteristics

- SC-75 (SOT-523) package
- Lead Finish: Matte Tin
- Pb-Free, Halogen Free, RoHS/WEEE Compliant
- Molding compound flammability rating: UL 94V-0
- Packaging: Tape and Reel

Applications

- USB 2.0
- Set Top Box
- mp3 Players
- Notebook Computers
- Networking Equipment

Dimensions

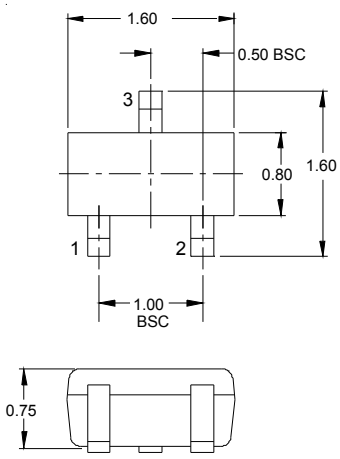

Nominal Dimensions (mm)

Schematic & PIN Configuration

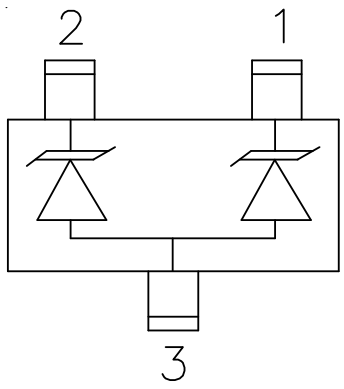

SC-75 3L (Top View)

Absolute Maximum Rating

Rating	Symbol	Value	Units
Peak Pulse Power (tp = 8/20µs)	P_{pk}	300	Watts
Peak Pulse Current (tp = 8/20µs)	I_{PP}	15	A
ESD per IEC 61000-4-2 (Air) ESD per IEC 61000-4-2 (Contact)	V_{ESD}	30 25	kV
Operating Temperature	T_J	-55 to +125	°C
Storage Temperature	T_{STG}	-55 to +150	°C

Electrical Characteristics (T=25°C)

Parameter	Symbol	Conditions	Minimum	Typical	Maximum	Units
Reverse Stand-Off Voltage	V_{RWM}	Pin 1 or Pin 2 to Pin 3			5	V
Reverse Breakdown Voltage	V_{BR}	I_t = 1mA Pin 1 or Pin 2 to Pin 3	6		11	V
Reverse Leakage Current	I_R	V_{RWM} = 5V, T=25°C Pin 1 or Pin 2 to Pin 3 and Between Pins 1 and 2			0.100	µA
Clamping Voltage	V_C	I_{PP} = 5A, tp = 8/20µs Pin 1 or Pin 2 to Pin 3			15	V
Clamping Voltage	V_C	I_{PP} = 15A, tp = 8/20µs Pin 1 or Pin 2 to Pin 3			20	V
Junction Capacitance	C_j	V_R = 0V, f = 1MHz Pin 1 to Pin 2		0.50	0.8	pF
Junction Capacitance	C_j	V_R = 0V, f = 1MHz Pin 1 or Pin 2 to Pin 3			1.2	pF

© 2010 Semtech Corp.

PROTECTION PRODUCTS

Typical Characteristics

Non-Repetitive Peak Pulse Power vs. Pulse Time

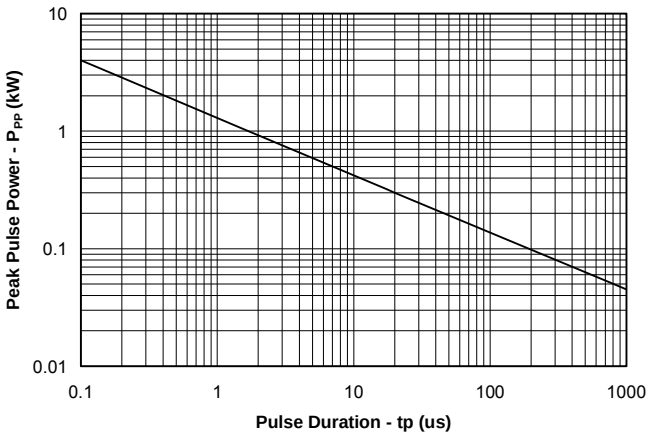

Power Derating Curve

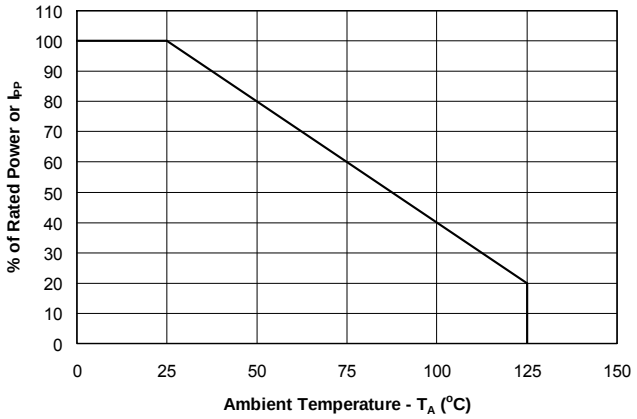

Clamping Voltage vs. Peak Pulse Current
Pin 1 or Pin 2 to Pin 3

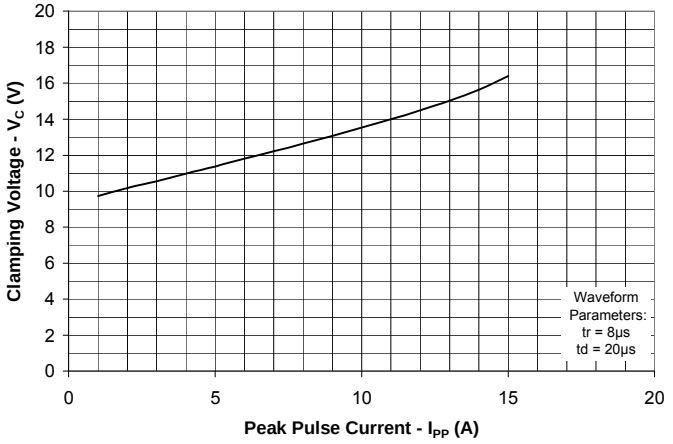

Normalized Capacitance vs. Reverse Voltage
Pin 1 or Pin 2 to Pin 3

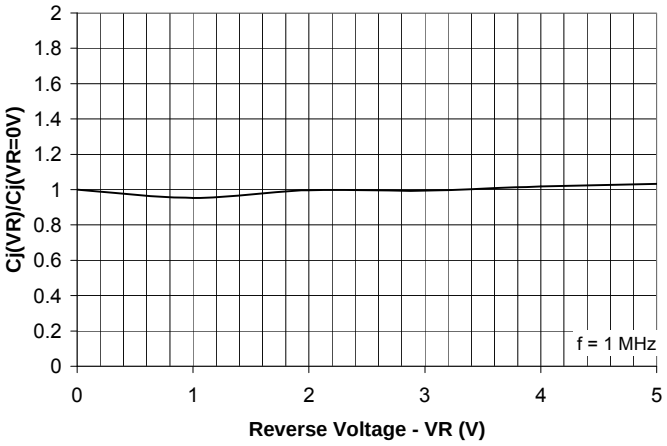

ESD Clamping - Pin 1 or Pin 2 to Pin 3
(8kV Contact per IEC 61000-4-2)

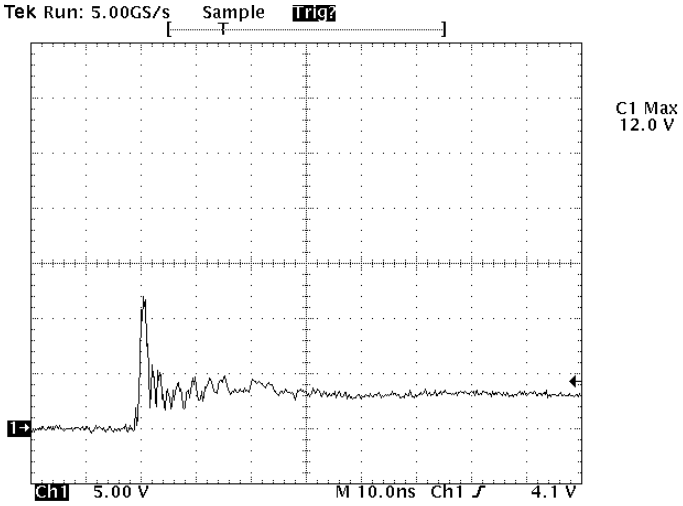

Insertion Loss S21 (Pin 1 or Pin 2 to Pin 3)

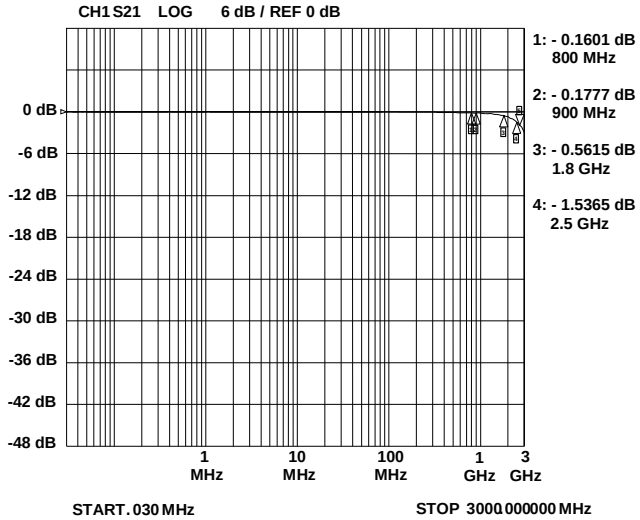

Note: Data is taken with a 10x attenuator

Applications Information

Device Connection Options

This device is optimized for protection of two high speed dta lines. The device is connected as follows:

Protection of two lines is achieved by connecting data lines at pins 1 & 2. Pin 3 is connected to ground. The connection to ground should be made directly to a ground plane. The path length should also be kept as short as possible to minimize parasitic inductance.

Matte Tin Lead Finish

Matte tin has become the industry standard lead-free replacement for SnPb lead finishes. A matte tin finish is composed of 100% tin solder with large grains. Since the solder volume on the leads is small compared to the solder paste volume that is placed on the land pattern of the PCB, the reflow profile will be determined by the requirements of the solder paste. Therefore, these devices are compatible with both lead-free and SnPb assembly techniques. In addition, unlike other lead-free compositions, matte tin does not have any added alloys that can cause degradation of the solder joint.

Figure 1. Pin Configuration

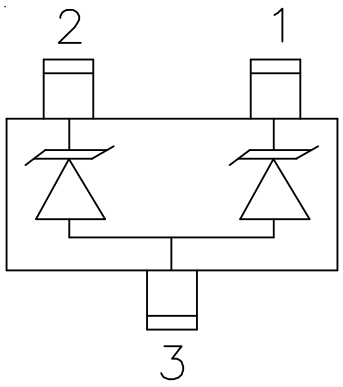

PROTECTION PRODUCTS

Outline Drawing -SC-75 (SOT-523)

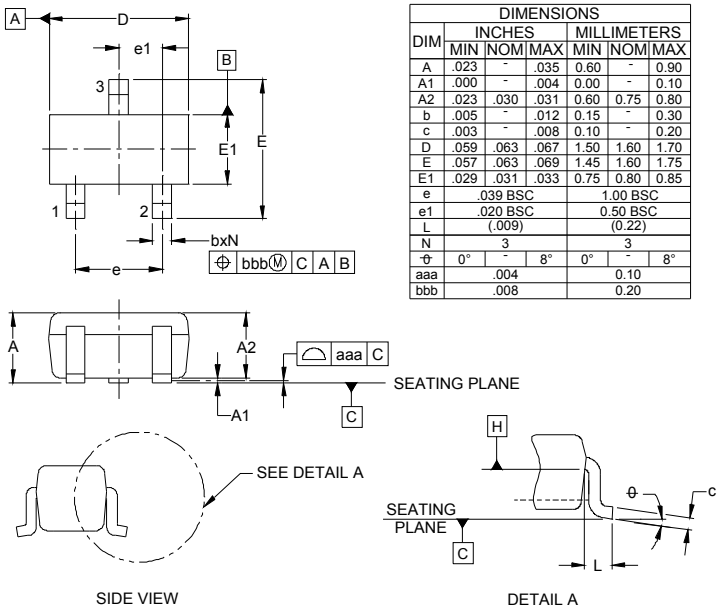

DIMENSIONS						
DIM	INCHES			MILLIMETERS		
	MIN	NOM	MAX	MIN	NOM	MAX
A	.023	-	.035	0.60	-	0.90
A1	.000	-	.004	0.00	-	0.10
A2	.023	.030	.031	0.60	0.75	0.80
b	.005	-	.012	0.15	-	0.30
c	.003	-	.008	0.10	-	0.20
D	.059	.063	.067	1.50	1.60	1.70
E	.057	.063	.069	1.45	1.60	1.75
E1	.029	.031	.033	0.75	0.80	0.85
e	.039 BSC			1.00 BSC		
e1	.020 BSC			0.50 BSC		
L	(.009)			(0.22)		
N	3			3		
θ	0°	-	8°	0°	-	8°
aaa	.004			0.10		
bbb	.008			0.20		

NOTES:

1. CONTROLLING DIMENSIONS ARE IN MILLIMETERS (ANGLES IN DEGREES).
2. DATUMS -A- AND -B- TO BE DETERMINED AT DATUM PLANE -H-
3. DIMENSIONS "E1" AND "D" DO NOT INCLUDE MOLD FLASH, PROTRUSIONS OR GATE BURRS.

Land Pattern -SC-75 (SOT-523)

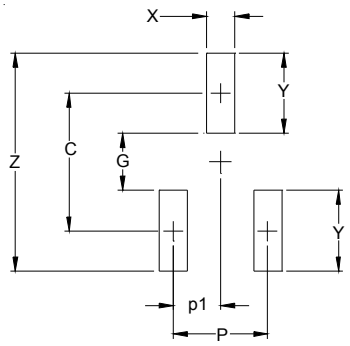

DIMENSIONS		
DIM	INCHES	MILLIMETERS
C	(.055)	(1.40)
P	.039	1.00
p1	.020	0.50
G	.024	0.60
X	.016	0.40
Y	.031	0.80
Z	.087	2.20

NOTES:

1. THIS LAND PATTERN IS FOR REFERENCE PURPOSES ONLY CONSULT YOUR MANUFACTURING GROUP TO ENSURE YOUR COMPANY'S MANUFACTURING GUIDELINES ARE MET.

PROTECTION PRODUCTS

Marking

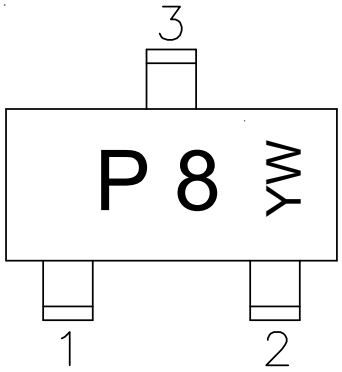

YW = Date Code

Ordering Information

Part Number	Lead Finish	Qty per Reel	Reel Size
RClamp0582B.TCT	Pb Free	3,000	7 Inch

RailClamp and RClamp are registered trademarks of Semtech Corporation

Tape and Reel Specification

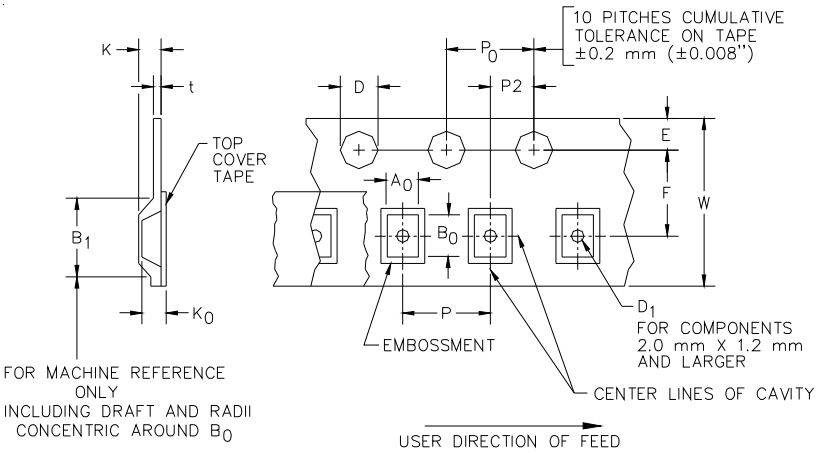

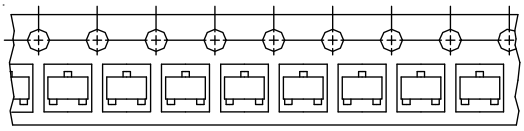

Device Orientation in Tape

A0	B0	K0
1.85 +/-0.15 mm	1.85 +/-0.15 mm	0.87 +/-0.15 mm

Tape Width	B, (Max)	D	D1 (MIN)	E	F	K (MAX)	P	P0	P2	T(MAX)	W
8 mm	4.2 mm (.165)	1.5 + 0.1 mm - 0.0 mm (0.59 +.005 - .000)	1.0 mm (.039)	1.750±.10 mm (.069±.004)	3.5±0.05 mm (.138±.002)	2.4 mm (.094)	4.0±0.1 mm (.157±.00-4)	4.0±0.1 mm (.157±.00-4)	2.0±0.05m-m (.079±.002)	0.4 mm (.016)	8.3 mm (.312±.012)

Contact Information

Semtech Corporation
Protection Products Division
200 Flynn Rd., Camarillo, CA 93012
Phone: (805)498-2111 FAX (805)498-3804