EZ1082
10.0A Positive Voltage Regulator

POWER MANAGEMENT

Description

The EZ1082 is a high performance positive voltage regulator designed for use in applications requiring low dropout performance at 10A. Additionally, the EZ1082 provides excellent regulation over variations in line, load and temperature.

Features include 1.4V dropout at 10A, fast transient response, internal current limiting and thermal shutdown protection of the output device. The EZ1082 series are three terminal regulators with fixed and adjustable voltage options available in the popular TO-220 package.

The EZ1082 is an excellent choice for powering microprocessor systems. Using an LDO eliminates MOSFETs and inductors saving both space and cost. An LDO also provides better transient response with no ripple to the load.

Features

- Low dropout performance, 1.4V max.
- Full current rating over line and temperature
- Fast transient response
- ±2% total output regulation over line, load and temperature
- Adjust pin current max 90µA over temperature
- Fixed/adjustable output voltage
- Line regulation typically 0.015%
- Load regulation typically 0.05%
- TO-220 3 pin package. Available in Pb-free plating, RoHS compliant

Applications

- High current microprocessor supplies
- Post regulators
- Microprocessor systems
- Medical equipment
- Embedded systems
- Post regulation for switching supplies
- Telecommunication systems

Typical Application Circuit

Fixed Voltage Regulator

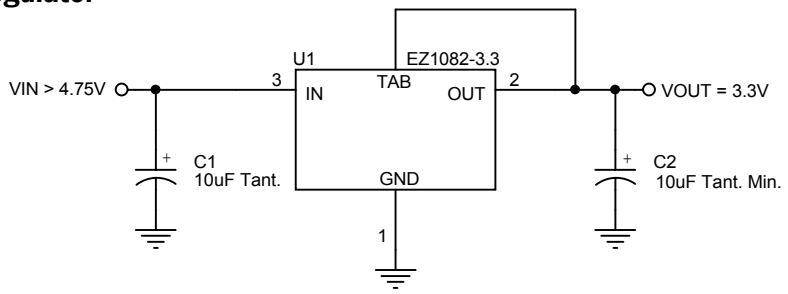

Adjustable Voltage Regulator

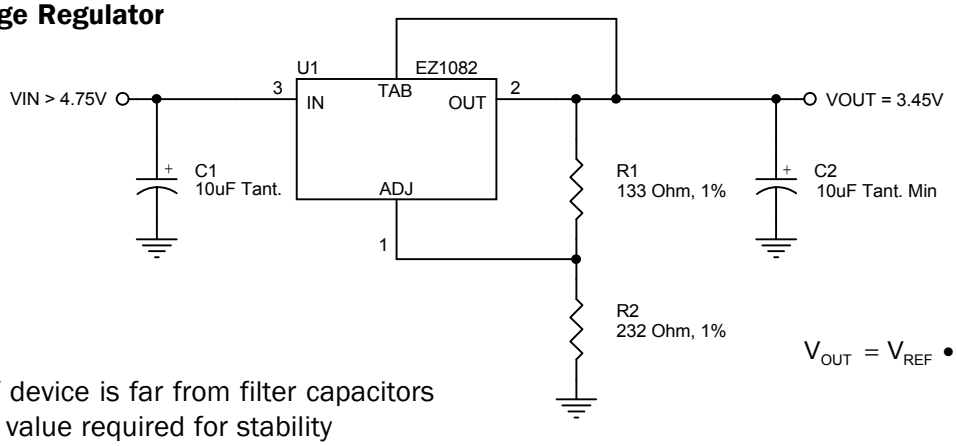

$$V_{OUT} = V_{REF} \bullet \left(1 + \frac{R2}{R1}\right) + I_{ADJ} \bullet R2$$

Notes:

(1) C1 needed if device is far from filter capacitors

(2) C2 minimum value required for stability

Absolute Maximum Ratings

Exceeding the specifications below may result in permanent damage to the device, or device malfunction. Operation outside of the parameters specified in the Electrical Characteristics section is not implied.

Parameter	Symbol	Maximum	Units
Input Supply Voltage	V_{IN}	7	V
Power Dissipation	P_D	Internally Limited	W
Thermal Resistance Junction to Case	θ_{JC}	3	°C/W
Thermal Resistance Junction to Ambient	θ_{JA}	50	°C/W
Operating Junction Temperature Range	T_J	0 to 125	°C
Storage Temperature Range	T_{STG}	-65 to 150	°C
Lead Temperature (Soldering) 10 Sec.	T_{LEAD}	300	°C

Electrical Characteristics

Unless otherwise specified: Adj. V_{IN} = 2.75V to 7.0V and Adj. I_O = 10mA to 10.0A; Fixed V_{IN} = 4.75 to 7.0V and Fixed I_O = 0 mA to 10.0A

Parameter	Symbol	V_{IN}	I_O	T_J (4)	Min	Typ	Max	Units
Output Voltage (1)	V_O	5V	OmA	25°C	$0.99\|V_O\|$	V_O	$1.01\|V_O\|$	V
Fixed Voltage Version				O.T.	$0.98\|V_O\|$	V_O	$1.02\|V_O\|$	
Reference Voltage (1)	V_{REF}	5V	10mA	25°C	1.238	1.250	1.262	V
Adj Voltage Version				O.T.	1.225	1.250	1.275	
Line Regulation (1)	$REG_{(LINE)}$		10mA	25°C		0.015	0.2	%
				O.T.		0.035	0.2	
Load Regulation (1)	$REG_{(LOAD)}$	5V		25°C		0.05	0.3	%
				O.T.		0.2	0.4	
Dropout Voltage	V_D			25°C		1.2		V
ΔV_{OUT}, ΔV_{REF} = 1%				O.T.		1.2	1.4	
Current Limit	I_{CL}			O.T.	10.0	12		A
Quiescent Current Fixed Voltage Version	I_Q	5V		O.T.		12	14	mA
Temperature Coefficient	T_C			O.T.		0.005		%/°C

Electrical Characteristics (Cont.)

Parameter	Symbol	V_{IN}	I_O	T_J[4]	Min	Typ	Max	Units
Adjust Pin Current	I_{ADJ}			25°C		55		µA
				O.T.			90	
Adjust Pin Current Change	ΔI_{ADJ}			O.T.		0.2	5	µA
Temperature Stability	T_S	5V	0.5A	O.T.		0.5		%
Minimum Load Current Adj Voltage Version	I_O	5V		O.T.		5	10	mA
RMS Output Noise[2]	V_N			25°C		0.003		$\%V_O$
Ripple Rejection Ratio[3]	R_A	5V	10.0A	O.T.	60	72		dB

NOTES:

(1) Low duty cycle pulse testing with Kelvin connections required.
(2) Bandwidth of 10 Hz to 10 kHz.
(3) 120 Hz input ripple (C_{ADJ} for ADJ = 25µF).
(4) Over Temp. (O.T.) = over specified operating junction temperature range.

POWER MANAGEMENT

Pin Configuration

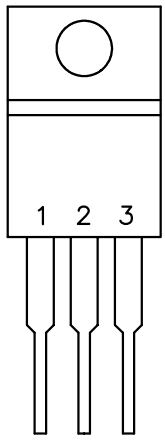

PIN	FUNCTION
1	ADJ/GND
2	OUTPUT
3	INPUT

TAB IS OUTPUT

TO–220

Ordering Information

Device[1][2]	Package[3]
EZ1082CT-X.XT	TO-220

Notes:

(1) Where X.X denotes voltage options. Available voltages are: 2.5V and 3.3V. Leave blank for adjustable version (1.3 to 5.7V). Contact factory for additional voltage options.

(2) Only available in tube packaging. A tube contains 50 devices.

(3) Available in Pb-free plating, RoHS compliant.

Block Diagram

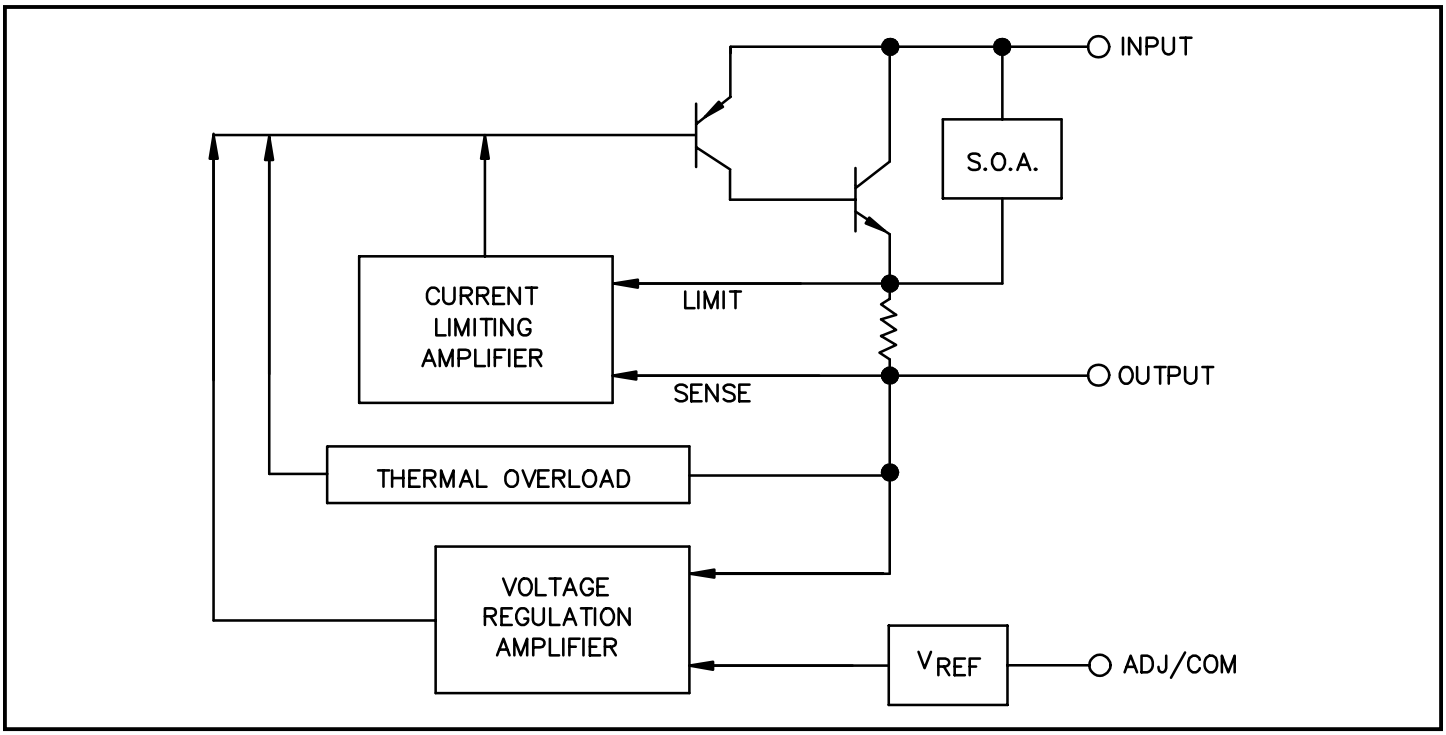

POWER MANAGEMENT

Outline Drawing - TO-220

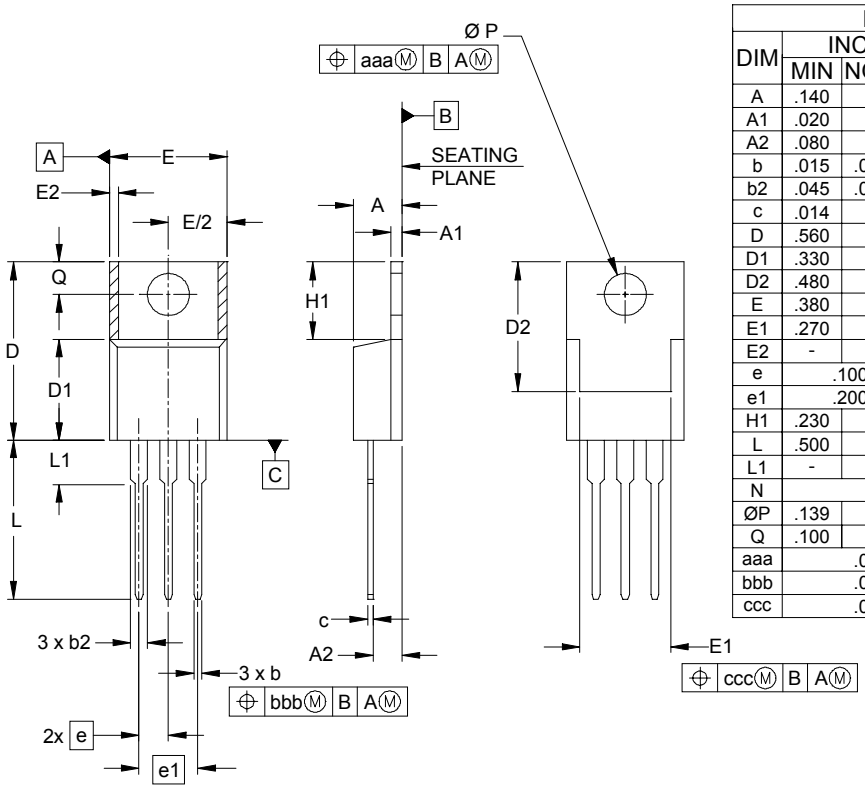

DIMENSIONS						
DIM	INCHES			MILLIMETERS		
	MIN	NOM	MAX	MIN	NOM	MAX
A	.140	-	.190	3.56	-	4.82
A1	.020	-	.055	0.51	-	1.40
A2	.080	-	.115	2.03	-	2.92
b	.015	.027	.040	0.38	0.69	1.02
b2	.045	.057	.070	1.14	1.45	1.78
c	.014	-	.024	0.36	-	0.61
D	.560	-	.650	14.22	-	16.51
D1	.330	-	.355	8.38	-	9.02
D2	.480	-	.507	12.19	-	12.88
E	.380	-	.420	9.65	-	10.66
E1	.270	-	.350	6.86	-	8.90
E2	-	-	.030	-	-	0.76
e	.100 BSC			2.54 BSC		
e1	.200 BSC			5.08 BSC		
H1	.230	-	.270	5.84	-	6.86
L	.500	-	.580	12.70	-	14.73
L1	-	-	.250	-	-	6.35
N	3			3		
ØP	.139	-	.156	3.53	-	3.96
Q	.100	-	.120	2.54	-	3.05
aaa	.014			0.36		
bbb	.015			0.38		
ccc	.010			0.25		

NOTES:

1. CONTROLLING DIMENSIONS ARE IN INCHES.
2. DIMENSIONS "D" AND "E" DO NOT INCLUDE MOLD FLASH, PROTRUSIONS OR GATE BURRS.

Contact Information

Semtech Corporation
Power Management Products Division
200 Flynn Road, Camarillo, CA 93012
Phone: (805)498-2111 FAX (805)498-3804