EClamp0504T
Low Profile EClamp®
4-Line ESD protection

PROTECTION PRODUCTS - EMIClamp®

Description

The EClamp®0504T is designed to protect sensitive electronics from damage or latch-up due to ESD. This state-of-the-art device utilizes solid-state silicon-avalanche technology for superior clamping performance and DC electrical characteristics. It has been optimized for **protection of digital lines** in cellular phones and other portable electronics.

The device replaces up to eight discrete components in a small footprint. It consists of a TVS diode and a series 1K Ohm resistor on each line. The TVS diode presents a maximum loading capacitance of 15pF for maximum signal integrity. The TVS diodes provide effective suppression of ESD voltages in excess of ±15kV (air discharge) and ±8kV (contact discharge) per IEC 61000-4-2, level 4.

The EClamp0504T is in an 8-pin SLP2116P8T package. It measures 2.1 x 1.6 x 0.40mm. The leads are spaced at a pitch of 0.5mm and are finished with lead-free NiPdAu. Each device will protect four lines operating at 5 volts. It gives the designer the flexibility to protect single lines in applications where arrays are not practical. The small package makes it ideal for use in portable electronics such as cell phones, digital still cameras, and PDAs.

Features

- Transient protection for data lines to
  IEC 61000-4-2 (ESD) ±17kV (air), ±12kV (contact)
  IEC 61000-4-4 (EFT) 40A (tp = 5/50ns)
  Cable Discharge Event (CDE)
- Protects four data lines
- TVS working voltage: 5V
- Series Resistor: 1K Ohm
- Capacitance: 15pF (Maximum at VR = 0V)
- Low leakage current (<100nA)
- Solid-state silicon-avalanche technology

Mechanical Characteristics

- SLP2116P8T package
- Pb-Free, Halogen Free, RoHS/WEEE Compliant
- Nominal Dimensions: 2.1 x 1.6 x 0.4 mm
- Lead Finish: NiPdAu
- Molding compound flammability rating: UL 94V-0
- Marking : Marking code
- Packaging : Tape and Reel

Applications

- Cellular Handsets & Accessories
- Personal Digital Assistants (PDAs)
- Notebooks & Handhelds
- Portable Instrumentation
- Peripherals
- MP3 Players

Schematic

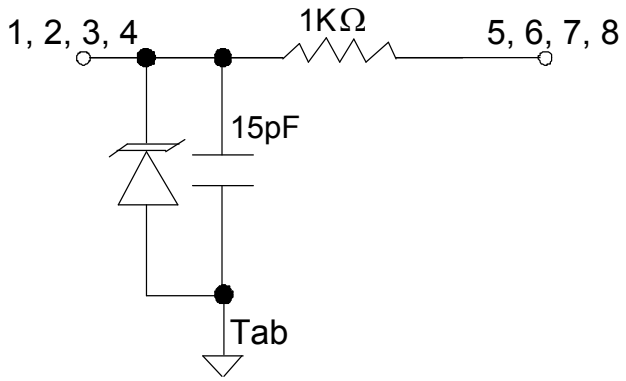

Pin Identification and Configuration (4 each)

Package Configuration

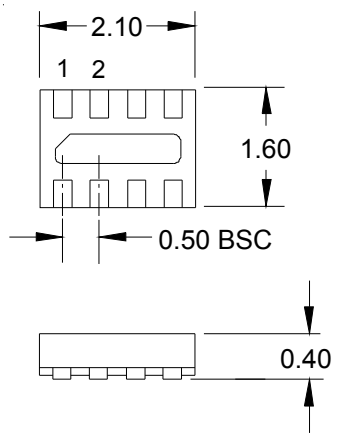

8 Pin SLP package (Bottom Side View)
Nominal Dimensions in mm

Absolute Maximum Rating

Rating	Symbol	Value	Units
Peak Pulse Power (tp = 8/20µs)	P_{pk}	25	Watts
Maximum Peak Pulse Current (tp = 8/20µs)	I_{pp}	2	Amps
ESD per IEC 61000-4-2 (Air) [1] ESD per IEC 61000-4-2 (Contact) [1]	V_{ESD}	+/- 17 +/- 12	kV
Operating Temperature	T_J	-40 to +85	°C
Storage Temperature	T_{STG}	-55 to +150	°C

Notes:
1) ESD rating between pins 1, 2, 3, and 4 to ground. Pins 5, 6, 7, and 8 not rated for IEC level ESD discharges

Electrical Characteristics (T=25°C)

Parameter	Symbol	Conditions	Minimum	Typical	Maximum	Units
TVS Reverse Stand-Off Voltage	V_{RWM}				5	V
TVS Reverse Breakdown Voltage	V_{BR}	I_t = 1mA	6	8	10	V
TVS Reverse Leakage Current	I_R	V_{RWM} = 5.0V			0.1	µA
Total Series Resistance	R	Each Line	850	1000	1150	Ohms
Total Capacitance	C_{in}	Input to Gnd, Each Line V_R = 0V, f = 1MHz	10	12	15	pF

Pin Identification and Configuration

Pin	Symbol	Identification
1	I/O In	Data Input (Connector Side)
2	I/O In	Data Input (Connector Side)
3	I/O In	Data Input (Connector Side)
4	I/O In	Data Input (Connector Side)
5	I/O Out	Data Output (To Protected IC)
6	I/O Out	Data Output (To Protected IC)
7	I/O Out	Data Output (To Protected IC)
8	I/O Out	Data Output (To Protected IC)
Tab	GND	Ground

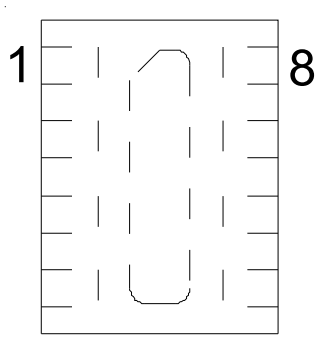

Pin Configuration (Top View)

Typical Characteristics

Non-Repetitive Peak Pulse Power vs. Pulse Time

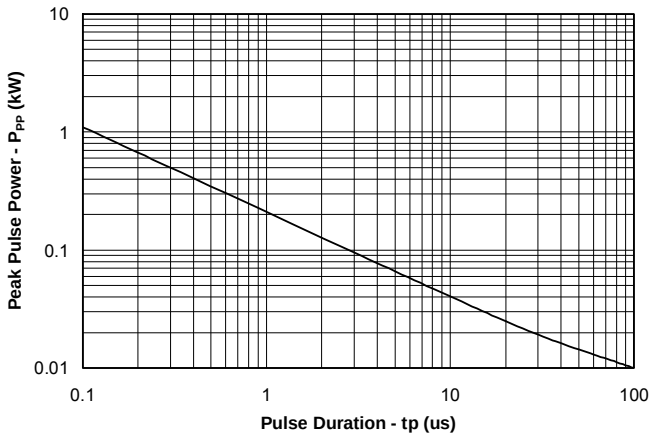

Power Derating Curve

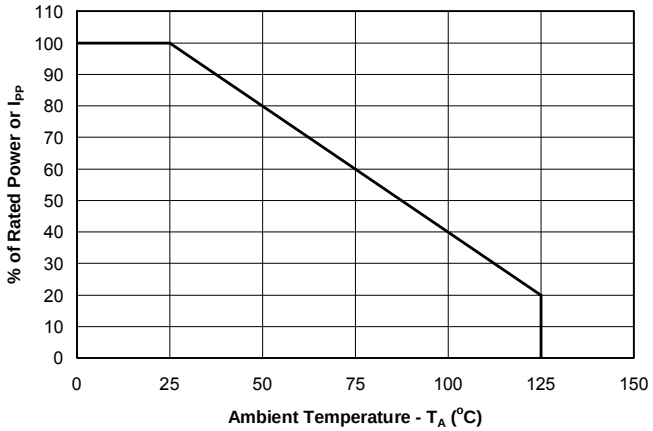

Normalized Junction Capacitance vs. Reverse Voltage

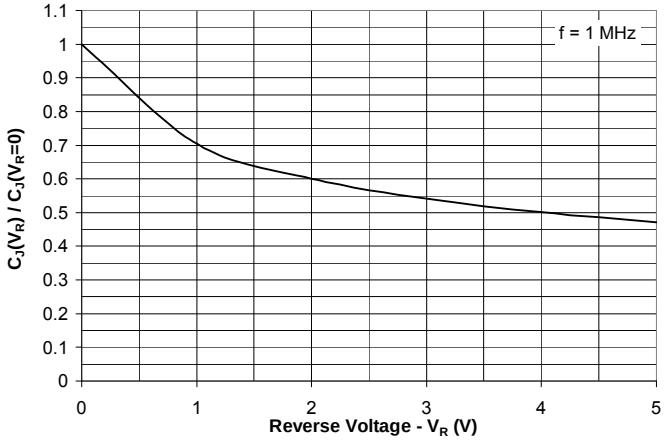

Forward Voltage vs. Forward Current

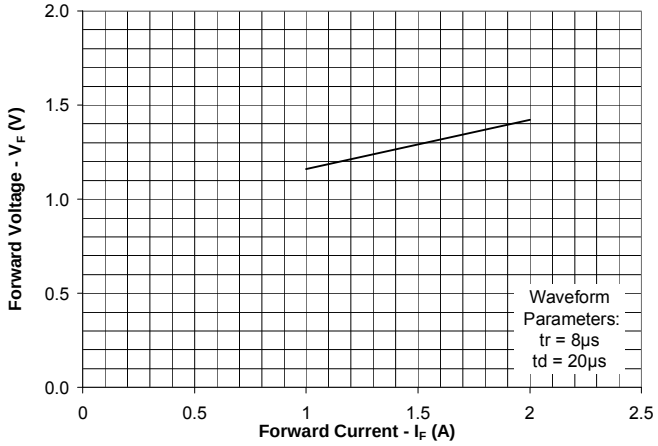

ESD Clamping (Measured between I/O in and Gnd) (8kV Contact per IEC 61000-4-2)

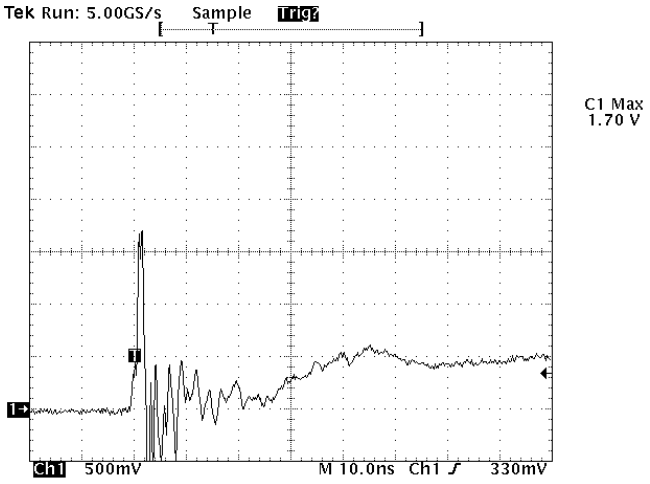

Insertion Loss S21

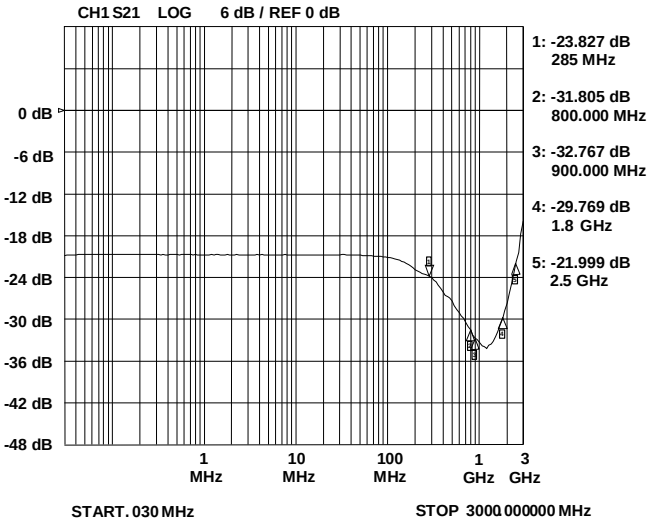

Note: Data is taken with a 10x attenuator

PROTECTION PRODUCTS

Applications Information

Device Connection Options

This device is designed to protect four data lines. The device is unidirectional and may be used on lines where the signal polarity is above ground.

Circuit Board Layout Recommendations for Suppression of ESD.

Good circuit board layout is critical for the suppression of ESD induced transients. The following guidelines are recommended:

- Place the TVS near the input terminals or connectors to restrict transient coupling.
- Minimize the path length between the TVS and the protected line.
- Minimize all conductive loops including power and ground loops.
- The ESD transient return path to ground should be kept as short as possible.
- Never run critical signals near board edges.
- Use ground planes whenever possible.

Circuit Diagram

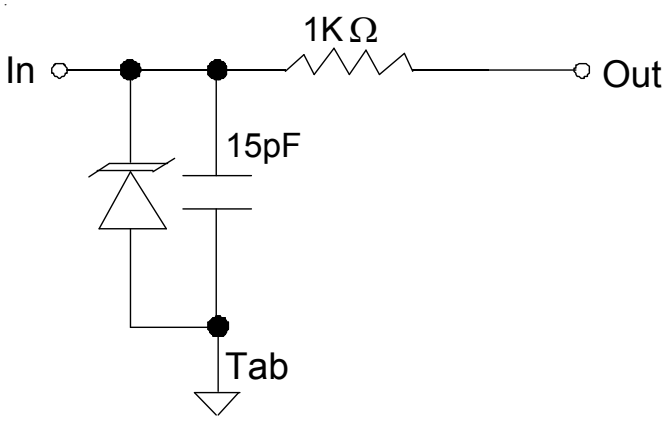

Applications Information - Spice Model

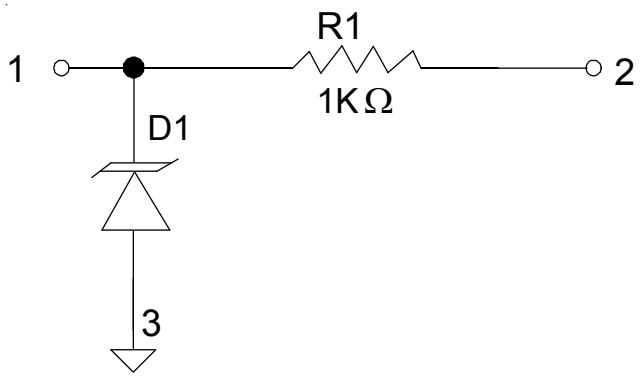

Spice Model

Table 1 - Spice Parameters		
Parameter	**Unit**	**D1 (TVS)**
IS	Amp	2E-15
BV	Volt	7.56
VJ	Volt	0.776
RS	Ohm	0.912
IBV	Amp	1.0E-3
CJO	Farad	11.5E-12
TT	sec	2.541E-9
M	--	0.23
N	--	1.1
EG	eV	1.11

PROTECTION PRODUCTS

Outline Drawing - SLP2116P8T

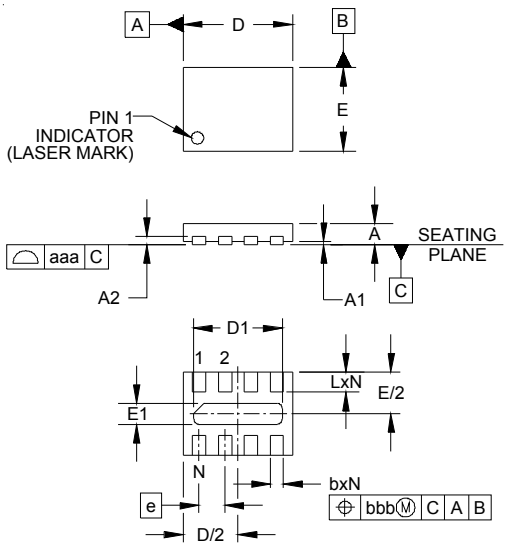

DIMENSIONS						
DIM	INCHES			MILLIMETERS		
	MIN	NOM	MAX	MIN	NOM	MAX
A	.015	.016	.017	0.37	0.40	0.43
A1	.000	.001	.002	0.00	.003	0.05
A2	(.005)			(0.13)		
b	.008	.010	.012	0.20	0.25	0.30
D	.079	.083	.087	2.00	2.10	2.20
D1	.061	.067	.071	1.55	1.70	1.80
E	.059	.063	.067	1.50	1.60	1.70
E1	.010	.016	.020	0.25	0.40	0.50
e	.020 BSC			0.50 BSC		
L	.011	.013	.015	0.28	0.33	0.38
N	8			8		
aaa	.003			0.08		
bbb	.004			0.10		

NOTES:

1. CONTROLLING DIMENSIONS ARE IN MILLIMETERS (ANGLES IN DEGREES).
2. COPLANARITY APPLIES TO THE EXPOSED PAD AS WELL AS THE TERMINALS.

Land Pattern - SLP2116P8T

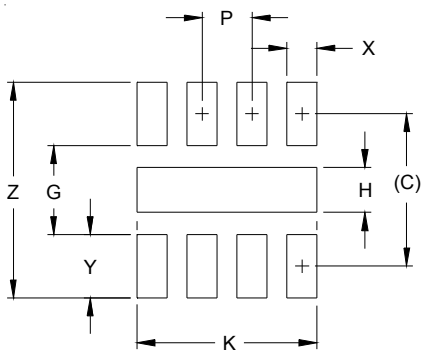

DIMENSIONS		
DIM	INCHES	MILLIMETERS
C	(.060)	(1.52)
G	.035	0.89
H	.018	0.45
K	.071	1.80
P	.020	0.50
X	.012	0.30
Y	.025	0.63
Z	.085	2.15

NOTES:

1. CONTROLLING DIMENSIONS ARE IN MILLIMETERS (ANGLES IN DEGREES).
2. THIS LAND PATTERN IS FOR REFERENCE PURPOSES ONLY. CONSULT YOUR MANUFACTURING GROUP TO ENSURE YOUR COMPANY'S MANUFACTURING GUIDELINES ARE MET.
3. THERMAL VIAS IN THE LAND PATTERN OF THE EXPOSED PAD SHALL BE CONNECTED TO A SYSTEM GROUND PLANE. FAILURE TO DO SO MAY COMPROMISE THE THERMAL AND/OR FUNCTIONAL PERFORMANCE OF THE DEVICE.

© 2011 Semtech Corp.

PROTECTION PRODUCTS

Marking Code

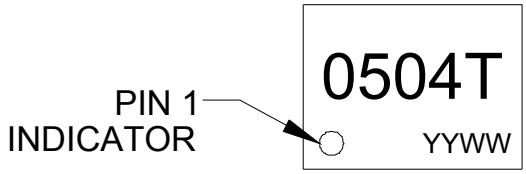

YYWW = Date Code

Ordering Information

Part Number	Working Voltage	Qty per Reel	Reel Size
EClamp0504T.TCT	5V	3,000	7 Inch

EMIClamp and EClamp are trademarks of Semtech Corporation

Tape and Reel Specification

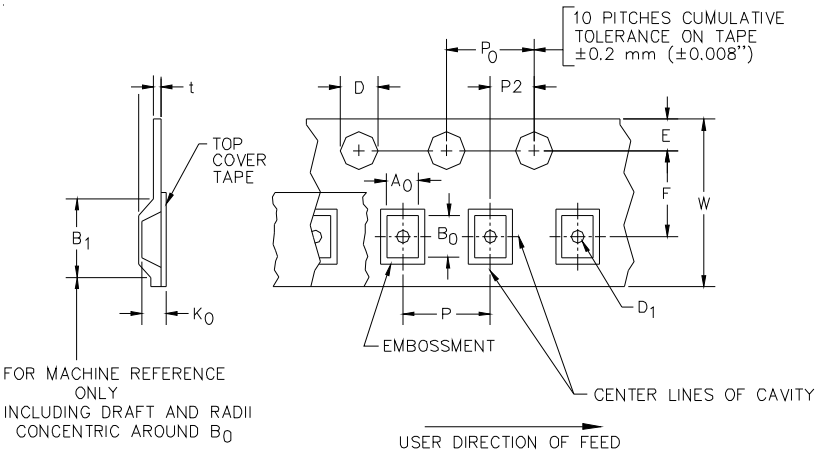

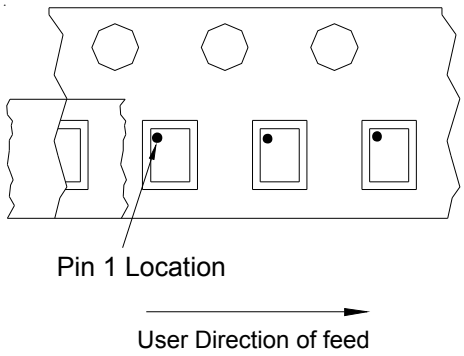

Device Orientation in Tape

A0	B0	K0
1.96 +/-0.10 mm	2.31 +/-0.10 mm	0.66 +/-0.10 mm

Tape Width	B, (Max)	D	D1	E	F	P	P0	P2	T	W
8 mm	4.2 mm (.165)	1.5 + 0.1 mm - 0.0 mm (0.59 +.005 - .000)	0.4 mm ±0.25 (.031)	1.750±.10 mm (.069±.004)	3.5±0.05 mm (.138±.002)	4.0±0.10 mm (.157±.00-4)	4.0±0.1 mm (.157±.00-4)	2.0±0.05 mm (.079±.002)	0.254±0.02 mm (.016)	8.0 mm + 0.3 mm - 0.1 mm (.312±.012)

Contact Information

Semtech Corporation
Protection Products Division
200 Flynn Rd., Camarillo, CA 93012
Phone: (805)498-2111 FAX (805)498-3804